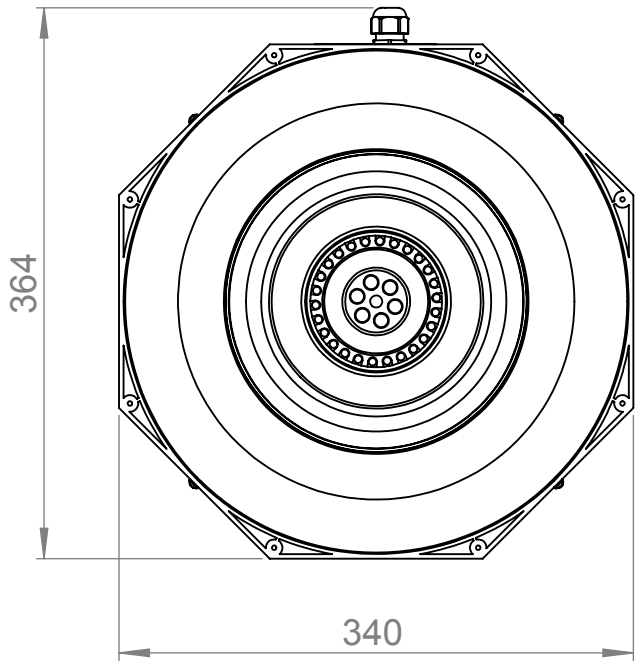

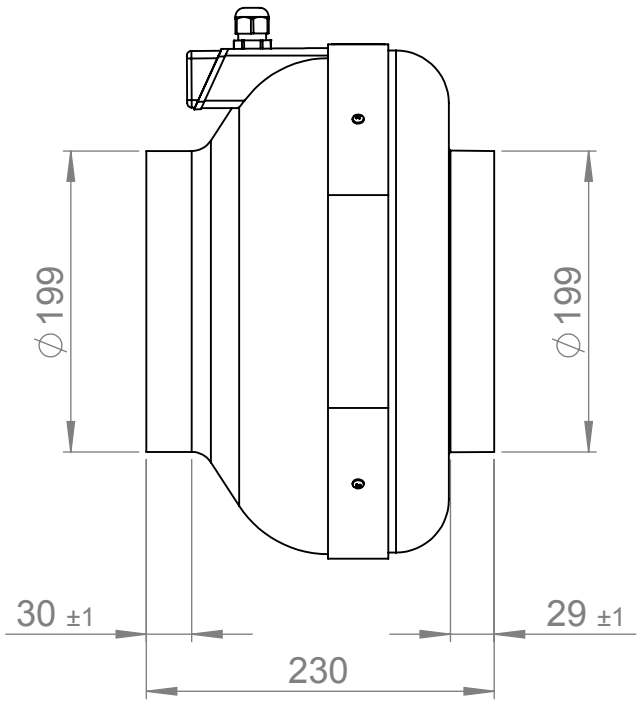

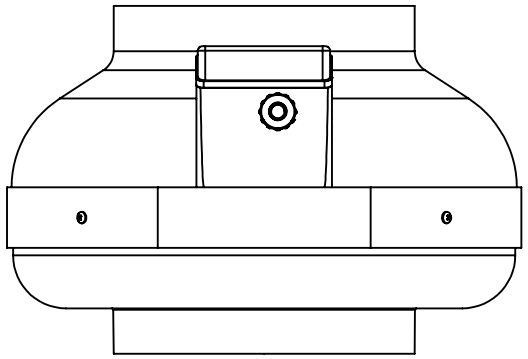

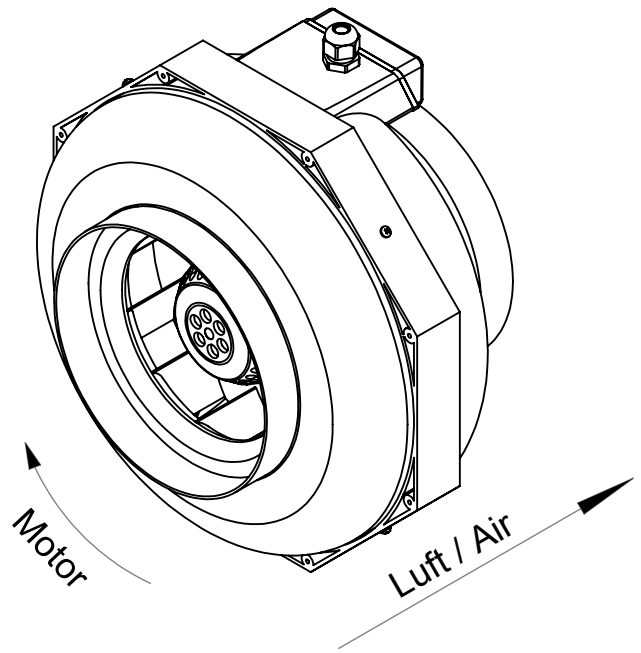

ruck VENTILATOREN

1:5 A4 mm

Protection Mark according to ISO16016

General tolerances DIN ISO 2768-mK

RK200+

ruck Ventilatoren
Max-Planck-Str. 5
D-97944 Boxberg

Drawn: s.bundschuh 13.01.10
Created: sy 26.06.06
Changed: a.muehleck 07.02.13

104514 01